RoHS Compliant

THIS DRAWING CONTAINS INFORMATION THAT IS PROPRIETARY TO ZDT TECHNOLOGY. AND SHOULD NOT BE USED WITHOUT WRITTEN PERMISSION

REV	ECN No.	DATE	REMARK
A	NEW	2022.07.07	NEW RELEASE

TYPE C协会TID NO. 7685

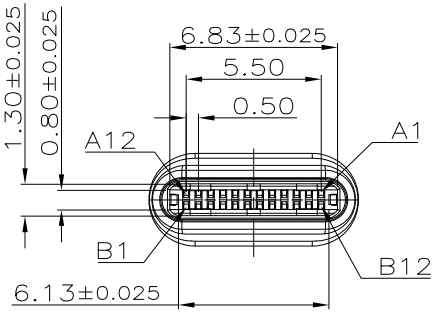

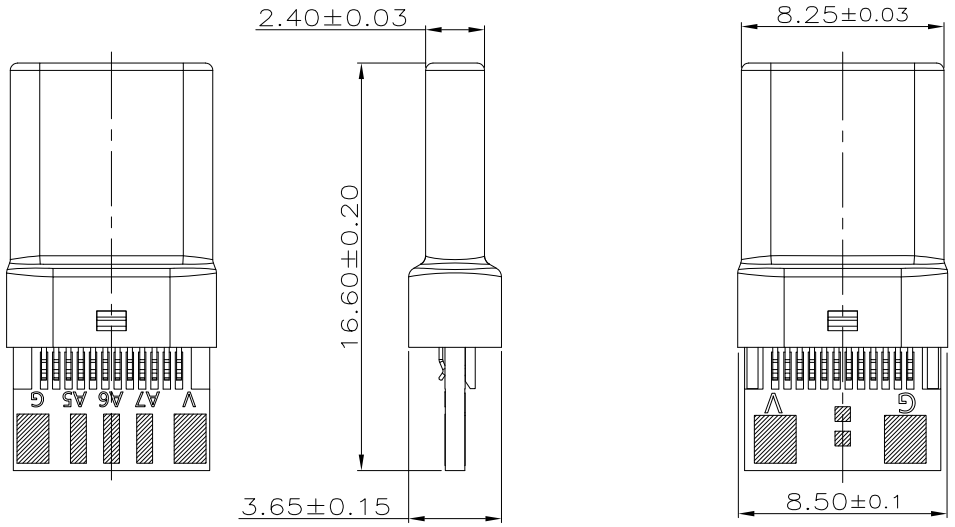

备 注：

1.电性参数

电 流：3.0A Max,

接触电阻：最初40mΩ Max,

寿命测试后变化±10

绝缘阻抗：100MΩ Min

耐 压：100V AC

2.机械参数

插入力：5-20N MAX.

拔出力：8-20N MIN.

耐久性：10000 Cycles 500 cycles per hour

3.沾锡性：温度250±5°，时间5±0.5s

4. PCB双层板

5.PCB板规格：2.0 CtoC,电容10NF

6.SALT SPRAY:24H

7.符合ROHS要求

8.PART NUMBER CODE:

No.	PART NO.	REMARKS	PACKING
1	CM088-24LB02U-05-02	2.0 CtoC电容10NFLCP黑色半金锡3u"	胶 管

线路原理图

	PLUG端	PCB焊盘
电容	A1, A12, B1, B12, Shell	GND x2
10NF	A4, A9, B4, B9	VBUS x2
	A5	CC
	A6	Dp1
	A7	Dn1

TYPE:

No.	NAME	Q'TY	MATERIAL	FINISH
8	PCB	1PCS	PCB线路板 蓝油 T=0.8mm+电阻	---
7	Latch	1PCS	SUS 301 HV310-370;T=0.4	---
6	TERMINAL	24PCS	C7025 HV190-210;T=0.15	---
5	EMI PLATE	2PCS	SUS 304 HV310-370;T=0.10	---
4	FRONT SHELL	1PCS	SUS 316 HV310-370;T=0.15	---
3	HOUSING	1PCS	LCP+30%G.F BLACK UL94-V0	---
2	TERMINAL-Molding	2PCS	LCP+30%G.F BLACK UL94-V0	---

PART NO.: SEE THE PART NUMBER CODE

GENERAL TOLERANCES (UNLESS SPECIFIED)

x.xxxx	± ---
x.xxx	± 0.10
x.xx	± 0.25
x.x	± 0.30
ANGULAR	± --°

QUALITY SYMBOL

GOLDCONN TECHNOLOGIES COMPANY LIMITED

TITLE: Type C M焊板2.0 C TO C

DWG.NO. CM088-24-02

SHEET NO. 1 OF 1

DIMENSION STYLE: MM ONLY

DESIGN UNITS: METRIC

SCALE: 1:1

	DATE
DRAWN BY SAM	2022.07.07
CHECKED BY JAY	2022.07.07
APPROVED BY JACKY	2022.07.07

THIRD ANGLE PROJECTION

frame size: A4