RoHS Compliant Pb

THIS DRAWING CONTAINS INFORMATION THAT IS PROPRIETARY TO ZDT TECHNOLOGY. AND SHOULD NOT BE USED WITHOUT WRITTEN PERMISSION

TYPE C协会TID NO. 7685

REV	ECN No.	DATE	REMARK
A	NEW	2022.04.25	NEW RELEASE
B	---	2023.01.11	增加焊盘加锡规格

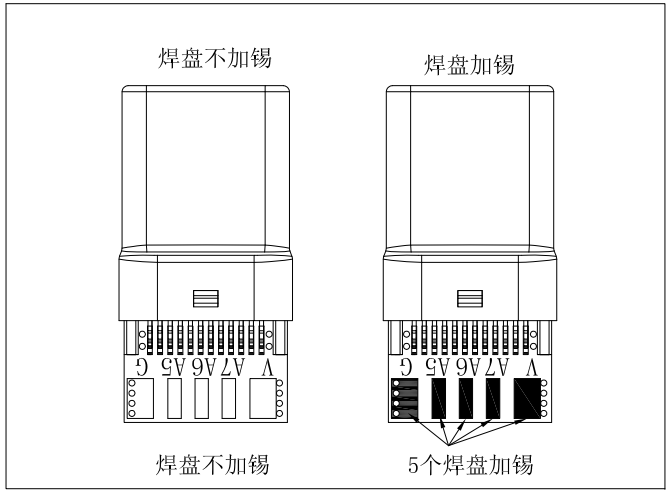

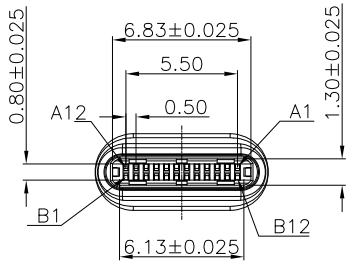

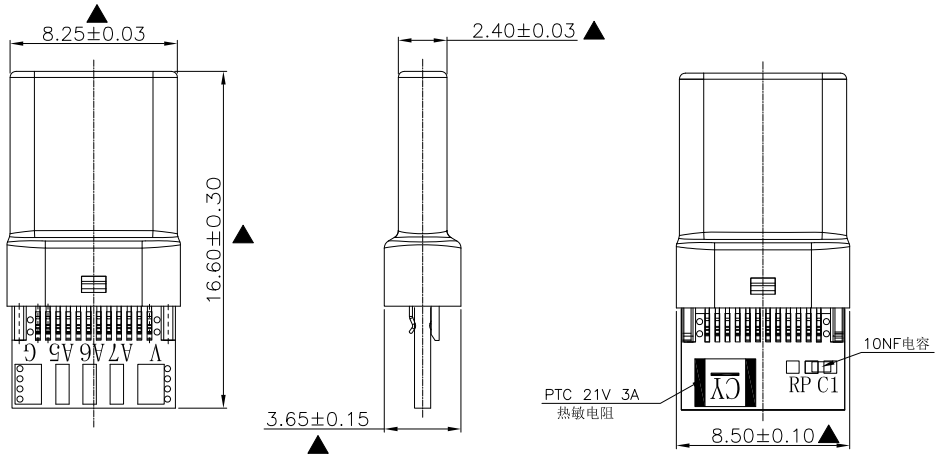

备 注:

1.电性参数
电 流：3.0A Max,.
接触电阻：最初40mΩ Max,
寿命测试后变化±10
绝缘阻抗：100MΩ Min
耐 压：100V AC
2. 机械参数
插入力：5-20N MAX.
拔出力：8-20N MIN.
耐久性：10000 Cycles 500 cycles per hour
3. 沾锡性：温度250±5°，时间5±0.5s
4.PCB双层板
6.符合ROHS要求.
7.注： 带“ ▲ ”号的为重点管控尺寸

8.PART NUMBER CODE:

NO.	PART NO.	REMARKS	PACKING
2	CM161-24LB02U-25T-97-02	2.0 C-C,无电阻+10NF电容,带热敏电阻 21V,3A焊盘加锡塑胶LCP黑色半金锡3u"	胶管包装
1	CM161-24LB02U-25-97-02	2.0 C-C,无电阻+10NF电容,带热敏电阻 21V,3A焊盘不加锡塑胶LCP黑色半金锡3u"	胶管包装

No.	NAME	Q'TY	MATERIAL	FINISH
9	电 容	1PCS	10NF电容	---
8	PTC	1PCS	带CY字样21V 3A PTC	---
7	PCB	1PCS	PCB线路板 蓝油 T=0.8mm	---
6	Latch	1PCS	SUS 301 HV310-370;T=0.4	---
5	TERMINAL	24PCS	C7025 HV190-210;T=0.15	---
4	EMI PLATE	2PCS	SUS 304 HV310-370;T=0.10	---
3	FRONT SHELL	1PCS	SUS 316 HV310-370;T=0.15	---
2	EMI-Molding	2PCS	LCP+30%G.F BLACK UL94-V0	---
1	TERMINAL-Molding	2PCS	LCP+30%G.F BLACK UL94-V0	---

线路原理图

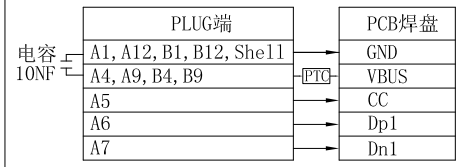

PART NO.:
SEE THE PART NUMBER CODE

QUALITY SYMBOL

GENERAL TOLERANCES (UNLESS SPECIFIED)	
x.xxxx	± ---
x.xxx	± 0.10
x.xx	± 0.20
x.x	± 0.30
ANGULAR	± --°

GOLDCONN TECHNOLOGIES COMPANY LIMITED

TITLE: Type CM 2.0 C TO C(带热敏电阻21V 3A)

DWG.NO.: CM161-24-02

SHEET NO.: 1 OF 1

DIMENSION STYLE: MM ONLY

DESIGN UNITS: METRIC

SCALE: 1:1

DRAWN BY	SAM	DATE 2023.01.11
CHECKED BY	JAY	DATE 2023.01.11
APPROVED BY	JACKY	DATE 2023.01.11

THIRD ANGLE PROJECTION

frame size: A4